PRODUCT DATA SHEET

Core Round Shower Head & Arm Brushed Brass

Product Code: NU-062

0330 124 7290

sales@scudo.co.uk - www.scudo.co.uk

Scudo is the trading name of Harrison Bathrooms Ltd. Whilst we endeavor to ensure that the product information is accurate, we accept no liability for any information given. All images are for illustration purposes only. Product images and specification are subject to change. Measurement are in millimeters and are nominal.

Product Name	NU-062
Product Description	Core Round Shower Head & Arm Brushed Brass
Product Transportation	
Barcode	5060991256386
Country of origin	CH
Commodity code	7324900000
Product Measurements	
Product Weight	1.4 KG
Product Width	253mm
Product Height	TBCmm
Product Lenght	350mm
Primary Packed Measurements	
Packaged Weight	1.7 KG
Packed Height	80mm
Packed Width	310mm
Packed Length	320mm

General Information	
Construction Material	Stainless Steel
Installation type	Wall Mounted
Colour / Finish	Brushed Brass
Tap / Shower Attributes	
WRAS Approved	No
TMV Approved	No
Minimum Operating Pressure (bar)	0.5
Maximum Operating Pressure (bar)	5
Inlet Connection	½ BSP
Shower Type	Wall Mounted Arm
Flow Rates	
0.2bar (l/min)	4.9
0.5bar (l/min)	8
1bar (l/min)	11.5
2bar (l/min)	16.1
3bar (l/min)	18.8
5bar (l/min)	23

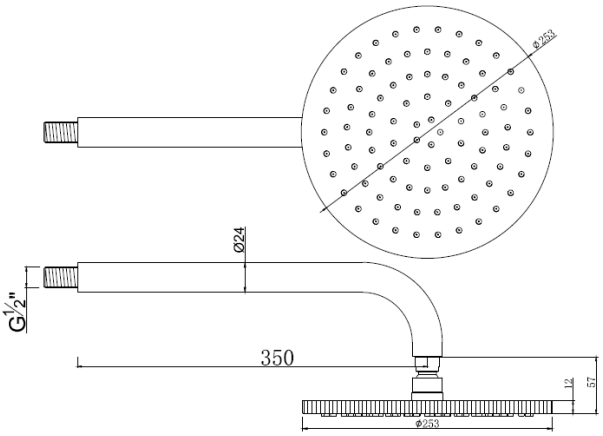

Dimensions
(measurements in mm)

LIFETIME GUARANTEE
We are confident in our products and we want our customer to be, we proudly give a lifetime guarantee on our taps and showers, further details can be found on our website